592878_0424_A04_Quick_Start_Guide_TCB_S.pdf 1 24.04.2024 08:34:18

Quick Start Guide

1

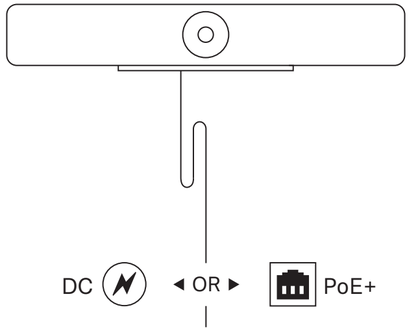

Connect to Power Supply

2

Download & Install Control Software

https://www.sennheiser.com/control-cockpit-software

3

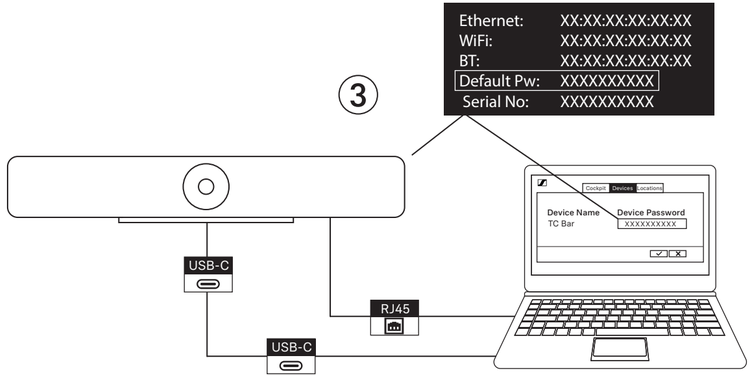

Get started directly via USB & configure via Ethernet